Installation Manual

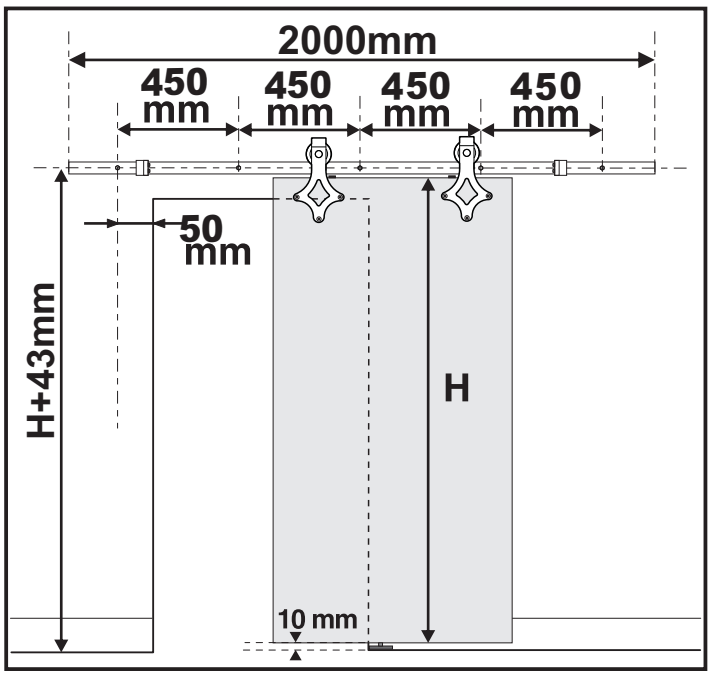

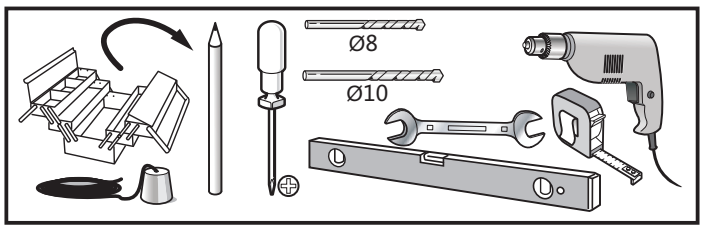

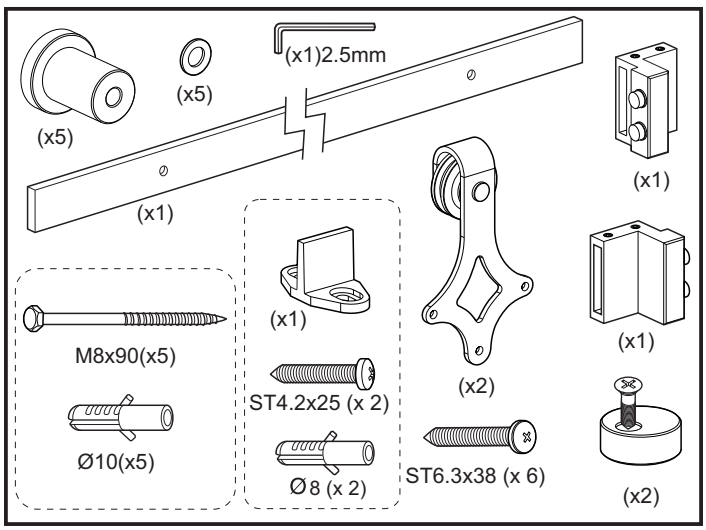

1

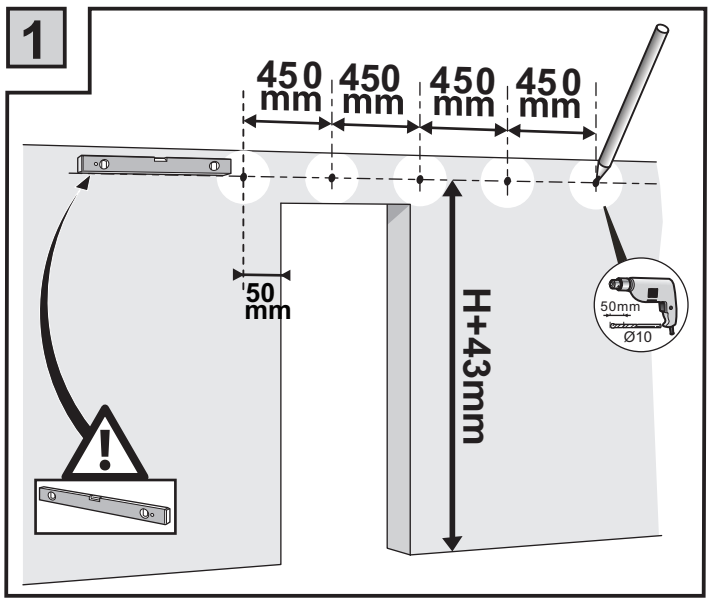

3

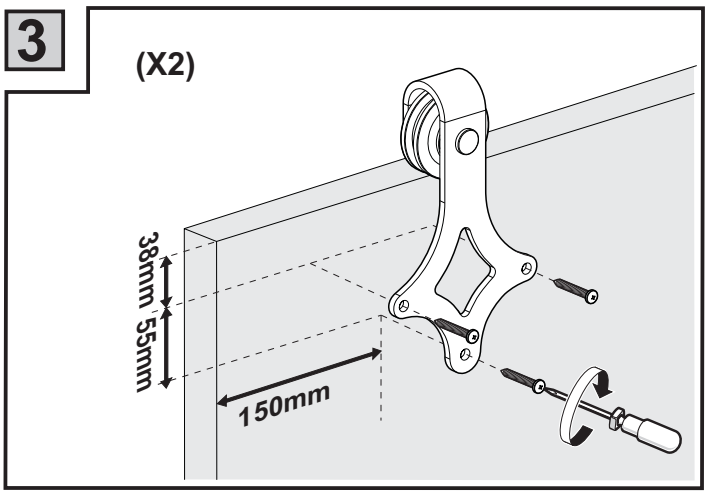

2

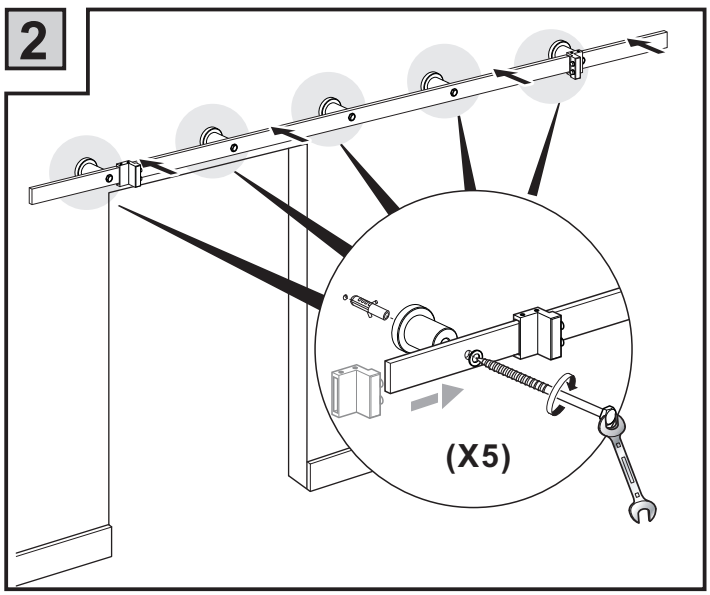

4

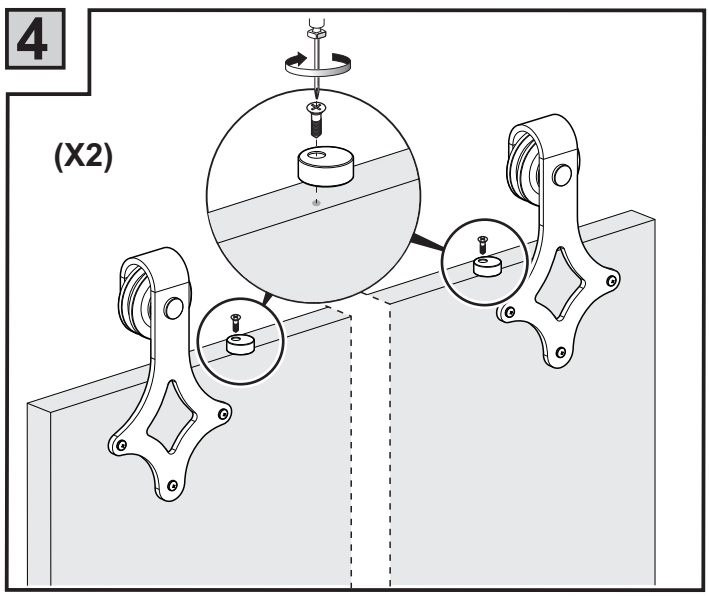

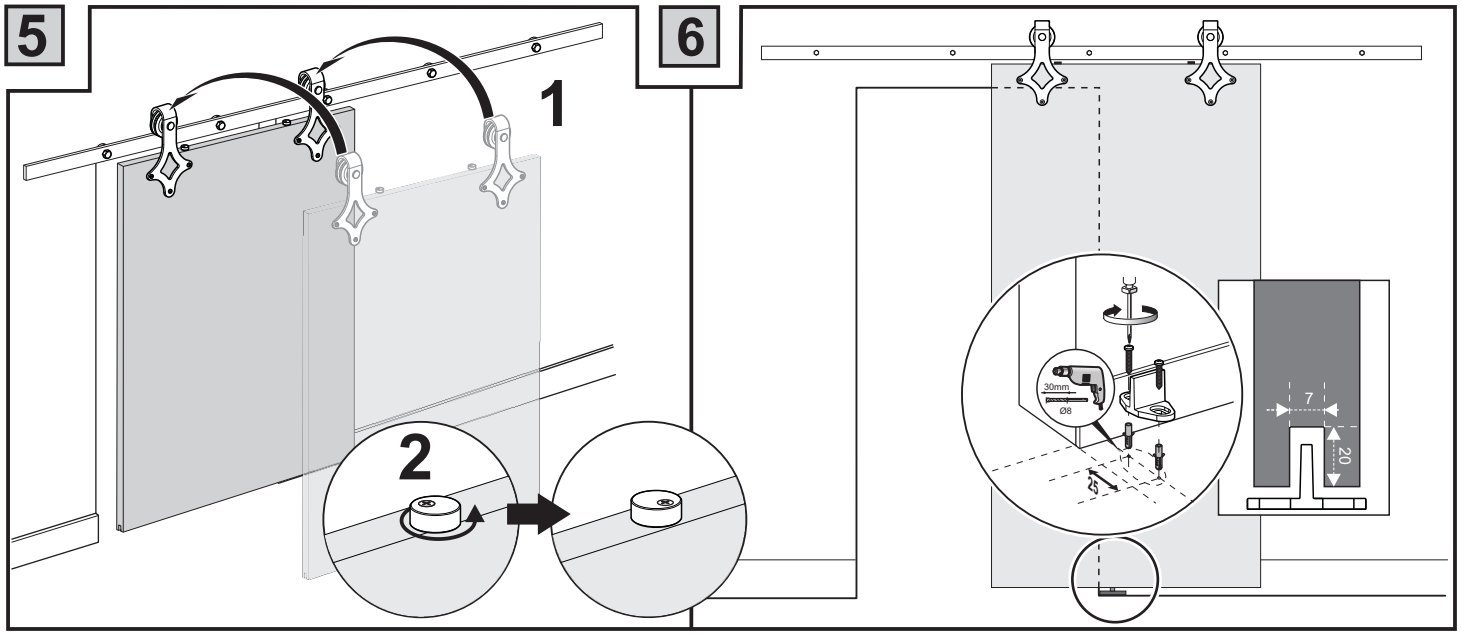
5
1
2
6
30mm
Ø8
7
20

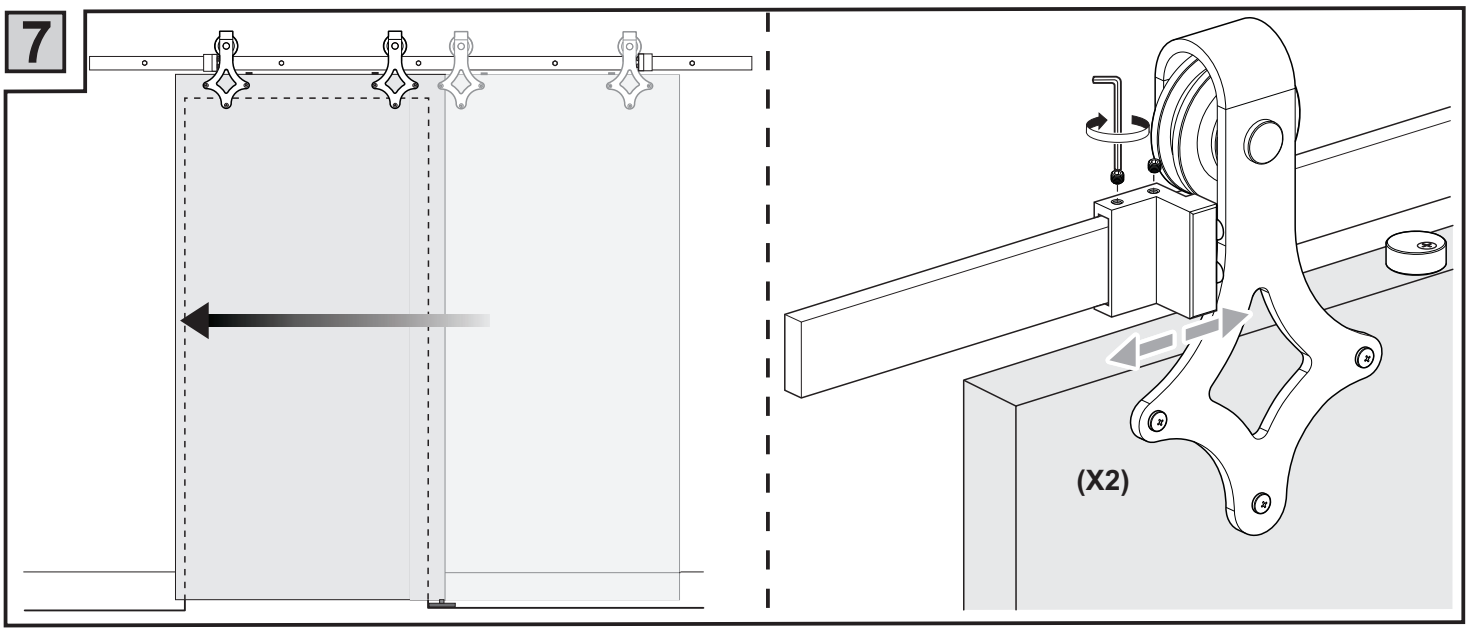
7
(X2)